GERMAN POOL

Multifunctional Steam & Grill Oven | SGN-B4021

Online Warranty Registration

Please read these instructions and warranty information carefully before use and keep them handy for future reference.

USER MANUAL

請即進行保用登記!

有關保用條款細則，請看本説明書最後一頁。

Please register your warranty information now!

For Warranty Terms & Conditions,

please refer to the last page of this user manual.

Contents

Warnings and Recommendations	4
Product Structure	6
Operating Instructions	8
Cleaning & Maintenance	14
Troubleshooting	15
Technical Specifications	16
Warranty Terms & Conditions	31

Warnings and Recommendations

Important

Please keep water of water tank more than Minimum level.

During working, water tank should be put in oven at all time.

1. Do not rinse the Outer Case of the product in water because there are electric components in the Case.
2. Do not allow water or other liquids to enter the product to avoid electric shock.
3. This appliance can be used by children aged from 8 years and above and Persons with reduced physical, sensory or mental capabilities or lack of experience and knowledge if they have been given supervision or instruction concerning use of the appliance in a safe way and understand the hazards involved. Children shall not play with the appliance. Cleaning and user maintenance shall not be made by children without supervision.
4. Please check whether the voltage of the product matches the voltage of local Power Supply before the product is connected to the Power Supply.
5. Do not use this product if the Plug, Power Cord or the product is damaged.
6. If the Power Cord is damaged, it must be replaced by the manufacturer or its professional service technicians in order to avoid danger.
7. Please take care of the children to make sure they do not play with this product.
8. Do not use wet hands to insert the Plug or operate the control panel of this product.
9. Do not place this product on or near the tablecloths, curtains and other flammable materials.
10. A free space of at least 10cm shall be left at the back and on two sides and above the product when the product is placed. Do not place any object on the product.
11. The product in use must be attended.
12. A high temperature steam or high temperature airflow will be released when you open its door during or after the operation of the product. A safe distance shall be maintained when the door of the product is opened to avoid the scalding yourself.
13. Do not insert any foreign matter into the Door Lock Switch of the Oven Door.
14. The recommended Temperature Probe to this oven must be used.
15. Appliances will heat during the use. Please pay attention to the Heating Unit in the Oven.
16. During use the appliance becomes hot. Care should be taken to avoid touching the heating elements inside the oven.
17. The appliance and its accessible parts become hot during use. Care should be taken to avoid touching the Heating Elements. Children less than 8 years of age shall be kept away unless continuously supervised.
18. Do not use harsh abrasive cleaners or sharp metal scrapers to clean the Oven Door, since they can scratch the surface, which may result in shattering of the glass.
19. Steam cleaner is not to be used.
20. WARNING: Ensure that the appliance is switched off before replacing the Lamp to avoid the possibility of electric shock.
21. The appliance must not be installed behind a decorative door in order to avoid overheating.

Warnings and Recommendations

Notices for Use

1. Please read the Instructions carefully before use. This product is designed specially for home heating and cooling of food and it is not suitable for other public and commercial purposes.
2. Do not touch at random the steam oven in use because the surface may have a very high temperature. If it is needed to touch or move the Oven, please power off the product first and then use a pair of insulated gloves.
3. The oven cannot be cleaned unless the Power Plug has been unplugged and the Oven has cooled down.
4. The Steam Oven shall be kept in a dry and flat place with plenty of space around it and a distance of at least 10cm shall be kept away from the surrounding objects when it is used.
5. An overloaded circuit may cause the steam oven to work abnormally. Therefore, the Steam Oven shall use a single circuit.
6. Do not put the steam oven near any flammable object. It shall be kept far away from window curtains, door curtains, wallpapers and similar items to prevent a fire. It is not allowed to put any object on top of the Steam Oven when it is working.
7. Please clean the Door Glass of the Oven with a soft and wet cloth rather than any sharp cleaning tools to prevent damaging the door glass.
8. The appliance cannot be operated under the circumstances that it connects the external timer or the independent remote control system.
9. Please do not share the Power Outlet with other high-power electrical devices to avoid a fire caused by overload of the Circuit.
10. Please check whether all cooking utensils are suitable for this product before using them. It is recommended to place food in high-temperature glass or ceramic containers. The capacity of holding the liquid food may not exceed two-thirds of the container.
11. It is required to unplug the Power Plug from the Outlet when the Oven will not be used for a long time to avoid any electric leakage or fire caused by aging of insulated rubber lines.
12. The Power Plug shall be unplugged when changing the lights or cleaning the cavity to avoid possible electric shock.
13. The Water Tank shall not be overfilled with water. Please use it correctly according to the maximum water level.
14. The food is not allowed to lean on the horizontal plane of Door Glass to prevent the product from scalding yourself to avoid it falling over at the end of cooking operation.
15. Please take out the Water Tank and allow the residual water of the product to flow out automatically from the product and drain or pour away the water from the bottom water holder after each use of the oven for cooking operation.
16. It is forbidden to heat food in a sealed container because the sealed container is possible to explode, such as, sealed bottles, boxed milk, etc. It is necessary to tear the package and place the food into other vessels for heating.
17. Please put the Oven on a counter of over 850 millimeter in height.

Product Structure

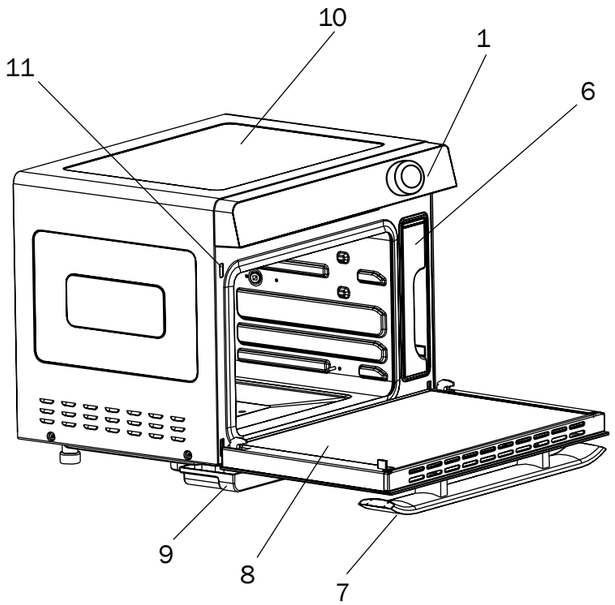

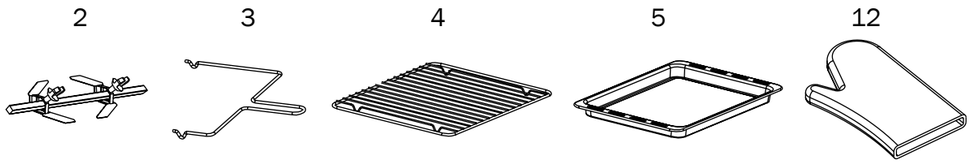

1. Control Panel
2. Rotisserie Fork
3. Rotisserie Rack
4. Wire Rack
5. Drip Tray
6. Water Tank
7. Oven Door Handle
8. Oven Door
9. Water Drip Collector
10. Oven Body
11. Door Safety Switch
12. Heat Resistant Glove

Accessories

NO.	Part Name	Quantity
1	Wire Rack	1
2	Drip Tray	1
3	Rotisserie Fork	1
4	Rotisserie Rack	1
5	Heat Resistant Glove	1
6	Instruction Manual	1

Product Structure

Rack Installation

There are 4 height levels for the Racks and Drip Tray. Please keep the Bulges downward and push the Racks into the Oven. Select a height level based on food type or recipe.

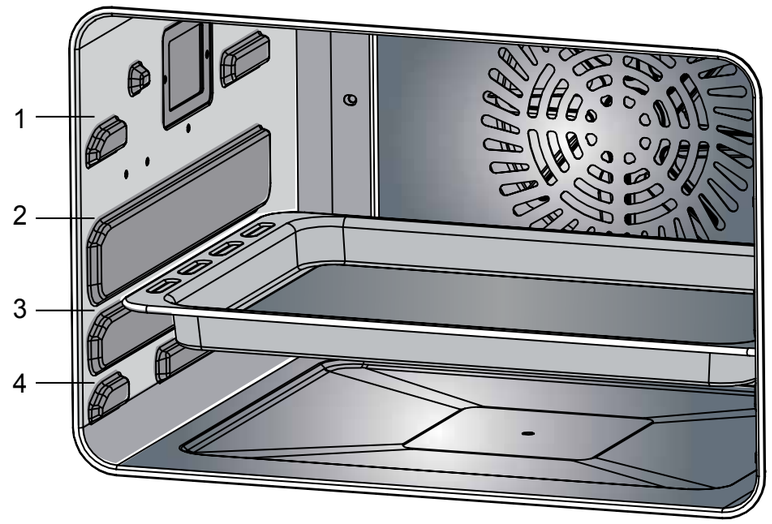

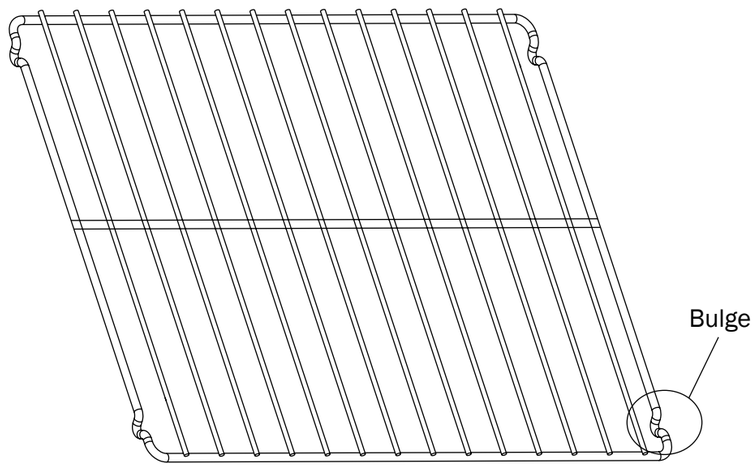

Control Panel

Function Key	Function Description
Power On/Off	1. Once the Oven is connected to power, a beep will be heard and indicator will be lit. Press “Power On/Off” key to enter Function Selection mode. 2. If no action is detected within 5 minutes, all current settings will be cancelled and return to Stand-by mode.
Child Lock / Settings	**Settings** 1. In one of the modes, press the “Child Lock / Settings” key. When the LED display and the Knob flash, turn the Knob to adjust the temperature and time settings. Press the Knob to confirm (or let the display and the Knob flash for 5 seconds to confirm automatically). User may adjust the temperature and time settings any time while cooking. 2. In the Menu mode, press the “Child Lock / Settings” key to adjust the time based on food portion. Time can be adjusted for one time only in the Menu mode. **Child Lock** In any operation mode, press and hold the “Child Lock / Settings” key for 3 seconds to lock the Control Panel. Press and hold the “Child Lock / Settings” key for 3 seconds again to unlock.
Knob (Start/Pause)	1. Press the Knob to start or pause cooking. 2. Turn the Knob to select one of the operation modes (displayed in clockwise direction): Steaming / Baking / Steaming + Baking / Oven-frying / Menu / Descaling / Defrosting / Proofing. 3. In one of the modes, turn the Knob to adjust the temperature and time settings. 4. When the Knob flashes, turn it to adjust or select settings, or press it to confirm current settings. 5. When the Oven is working, the Knob lights up continuously.

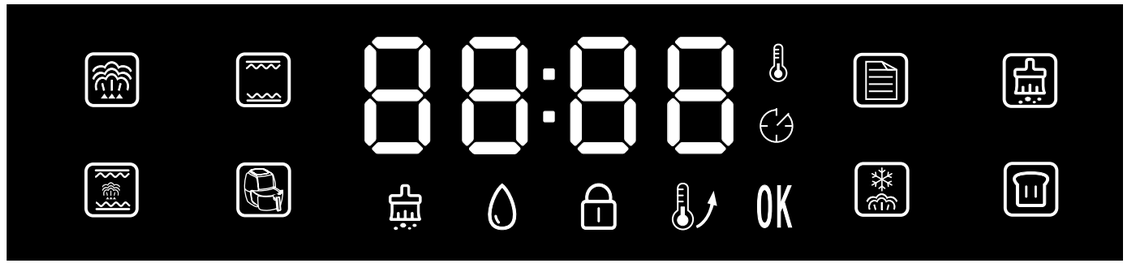

Function Key	Function Description
STEAM Mode	Main function of this mode is Steaming Default time: 30 minutes (1 minute – 2 hours) Default temperature: 100°C 1. When both the STEAM mode icon and the Knob flash together, press the Knob to enter this mode. 2. Turn the Knob to set the time. Press the Knob to confirm. 3. Turn the Knob to set the temperature. 4. Press the Knob again to start.
BAKE Mode	Main function of this mode is Baking (Upper and lower heating simultaneously; pre-heating included). Default time: 30 minutes (1 minute – 2 hours) Default temperature: 180°C 1. When both the BAKE mode icon and the Knob flash together, press the Knob to enter this mode. 2. Turn the Knob to set the time. Press the Knob (icon) to confirm. 3. Turn the Knob to set the temperature. 4. Press the Knob again to start. The Preheat (icon) icon will light up automatically, indicating that the oven is pre-heating. Once the desired temperature is reached, the Preheat icon will go off, and the buzzer will beep 10 times. Put the food into the oven at this time.
STEAM + BAKE Mode	Main function of this mode is Baking (with steam added during operation; pre-heating included). Default time: 30 minutes (1 minute – 2 hours) Default temperature: 180°C 1. When both the STEAM + BAKE mode icon and the Knob flash together, press the Knob to enter this mode. 2. Turn the Knob to set the time. Press the Knob to confirm. 3. Turn the Knob to set the temperature. 4. Press the Knob again to start. The Preheat icont will light up automatically, indicating that the oven is pre-heating. Once the desired temperature is reached, the Preheat icont will go off, and the buzzer will beep 10 times. Put the food into the oven at this time.

Function Key	Function Description
OVEN-FRY Mode	Main function of this mode is Oven-frying (heating and fan circulation work simultaneously; pre-heating included). Default time: 30 minutes (1 minute – 2 hours) Default temperature: 180°C 1. When both the OVEN-FRY mode icon and the Knob flash together, press the Knob to enter this mode. 2. Turn the Knob to set the time. Press the Knob (icon) to confirm. 3. Turn the Knob to set the temperature. 4. Press the Knob again to start. The Preheat icon iwill light up automatically, indicating that the oven is pre-heating. Once the desired temperature is reached, the Preheat icon iwill go off, and the buzzer will beep 10 times. Put the food into the oven at this time.
MENU Mode	There are 31 pre-set recipes in the menu. 1. When both the MENU mode icon and the Knob flash together, the LED Display will show “F-00”. Press the Knob to enter this mode. 2. Turn the Knob to select recipe: “F-01” “F-02” ... “F-31”. 3. Press the Knob to start. 4. Once operation has started, the status icon Child Lock / Settings lights up. Turn the Knob to set the time. (Time setting can be adjusted once)
DESCALE/CLEAN Mode	Main function of this mode is removing water scale build-ups from steam generator or cleaning oven cavity after cooking. 1. When both the DESCALE/CLEAN mode icon and the Knob flash together, press the Knob to enter this mode. 2. Turn the Knob to choose between C-1 and C-2. C-1 DESCALE: Removing scale build-ups (50 minutes)* C-2 CLEAN: Cleaning and sterilizing (25 minutes/100°C) Note: When the accumulated working time of the Steam Generator reaches 100 hours, the DESCALE mode icon will flash automatically (automatically enter C-1 DESCALE mode) For descaling, combine 1 part descaler and 8 parts water and pour solution into water tank (water level must be above Minimum mark). 3. Press the Knob to confirm. The DESCALE/CLEAN mode icon lights up continuously during operation. 4. (For C-1) When the time counts down to 20 minutes, replace descaler in the water tank with clean water. When it counts down to 10 minutes, replace the water in the tank with clean water again. 5. Once complete, the DESCALE/CLEAN mode icon will go off.

Function Key	Function Description
DEFROST Mode	Default time: 20 minutes (5 minutes – 2 hours) Default temperature: 55°C (50°C - 60°C) 1. When both the DEFROST mode icon and the Knob flash together, press the Knob to enter this mode. 2. Turn the Knob to set the time. 3. Press the Knob to confirm. 4. Turn the Knob to set the temperature. 5. Press the Knob again to start.
PROOF Mode	Default time: 40 minutes (5 minutes – 2 hours) Default temperature: 40°C (30°C - 50°C) 1. When both the PROOF mode icon and the Knob flash together, press the Knob to enter this mode. 2. Turn the Knob to set the time. 3. Press the Knob to confirm. 4. Turn the Knob to set the temperature. 5. Press the Knob again to start.
Water Refill	During any operation mode, this status icon will flash if the Water Tank is empty (water level is lower than the minimum mark). The oven will stop working and no key will respond until the Water Tank is refilled and put back into the Water Tank Slot.
Preheat	When the oven is pre-heating, this status icon lights up. Once the oven reaches the desired temperature, this icon will be switched off.
Complete OK	When cooking programme is done, the Display will show the word “END”. And the status icon OK lights up.
Child Lock	When the control panel is locked, this status icon lights up. Press “Child Lock / Settings” key for 3 seconds to unlock.
Descaling	When the oven is descaling, this status icon lights up. Once descaling is complete, this icon will be switched off.

Other Functions

Cooking	PAUSE Method 1: During cooking, press the Knob to pause. The mode icon and the Knob flash together. The time counter stops. Press the Knob again to resume counting down. Method 2: During cooking, open the Oven Door to pause the time counter. Close the door to resume. ADJUST TIME & TEMPERATURE 1. During cooking, press the “Child Lock / Setting” key. 2. The mode icon and the Knob will flash together. 3. Turn the Knob to set the time. 4. Press the Knob to confirm. 5. Turn the Knob to set the temperature. 6. Press the Knob again to start. Note: In Menu mode, time setting can be adjusted for one time only, and temperature setting is not adjustable.
Lighting	• When operation starts, the lighting will be switched on. After 3 minutes, it will be switched off automatically. • When the Oven Door is open during cooking, the lighting will be switched on for 3 minutes. When the Oven Door is shut, the lighting will turn on again and automatically switched off 3 minutes later. • When the Knob is turned during cooking or in Stand-by mode, the lighting will be switched on for 3 minutes.
Opening/Shutting of Oven Door	During cooking, open the Oven Door to pause the time counter. Close the door to resume operation.
Finishing	When cooking is over, the buzzer will beep 10 times and the LED Display will show the word “END”. The status icon OK will light up, indicating that cooking is complete.

Menu List

This menu is for reference only. If user puts more food inside or uses multiple layers of grills to cook food at the same time, please set different cooking time. Please use Setting icon to adjust Time.

Code	F-01	F-02	F-03	F-04	F-05	F-06	F-07	F-08	F-09
Recipe	Steam Vegetables	Steam Rice	Steam Fish	Steam Shrimp	Steam Crab	Steam Eggs	Steam Chicken	Steam Papaya	Roast Chicken
Time (minute)	16	50	20	15	30	18	30	35	45
Temperature (°C)	100	100	100	100	100	100	100	100	230
Food weight(g)	600	200	600	500	800	300	800	400	1000
Code	F-10	F-11	F-12	F-13	F-14	F-15	F-16	F-17	F-18
Recipe	Roast Steak	Roast Lamb	Roast Ribs	Grill Salmon	Grill Chicken Legs	Grill Chicken Wings	Grill Fish	Grill Chips	Grill Shrimp
Time (minute)	13	35	20	22	26	23	20	18	15
Temperature (°C)	230	200	210	210	210	210	220	220	180
Food weight(g)	600	600	500	400	750	500	600	500	400
Code	F-19	F-20	F-21	F-22	F-23	F-24	F-25	F-26	F-27
Recipe	Grill Sausages	Roast Bacon	Roast Pizza	Mini Pizza	Baguette	Sponge Cake	Cheese Cake	Puff	Cookies
Time (minute)	13	11	22	18	16	50	60	32	14
Temperature (°C)	200	200	180	180	180	150	150	180	180
Code	F-28	F-29	F-30	F-31					
Recipe	Egg Tarts	Roast Almond	Roast Walnut	Yogurt					
Time (minute)	22	10	12	480					
Temperature (°C)	180	140	160	45					

Cleaning & Maintenance

1. Please turn off the Steam Oven and unplug the Power Cord from the outlet before cleaning the cavity.
2. Do not clean the Drip Tray surface with metal tool or abrasive material. It would damage the non-stick coating.
3. Please keep the cavity clean at all time. When food or grease is splashed onto the inner wall of the oven, wipe with a damp cloth soaked with detergent rather than any hard substance.
4. It is recommended to fill the tank with distilled water. If tap water is used for a long time, there will be scale on the inner walls of the cavity.
5. The Water Tank should be checked regularly. Remove the Water Tank horizontally. It must be cleaned and wiped gently with soft cloth. After cleaning the inner wall of the oven, put the Water Tank back to its original place.
6. After cooking is completed, remove the remaining water in the Water Tank.
7. The sealing surface of the oven door should be cleaned frequently and wiped with a soft, dry cloth.
8. If the oven will not used for a long time, please unplug and clean the cavity. The oven should be stored in a dry environment with no exposure to corrosive gas.
9. The oven must be repaired by a licensed technician. Do not disassemble and repair it by yourself.
10. Do not clean the glass of Oven Door with a rough detergent or sharp metal scraper because it may lead to damage of the glass.
11. The Power cord must be unplugged when cleaning the cavity or replacing the lamp.
12. Do not use steam cleaner.

Troubleshooting

Code	Possible Causes	Solution
E01	Open circuit for top sensor	Stop the operation, open the oven door and allow the cavity to cool down for 10 minutes. Restart it or contact Customer Service.
E02	Short circuit for top sensor	Stop the operation, open the oven door and allow the cavity to cool down for 10 minutes. Restart it or contact Customer Service.
E03	Open circuit for bottom sensor	Stop the operation, open the oven door and allow the cavity to cool down for 10 minutes. Restart it or contact Customer Service.
E04	Short circuit for bottom sensor	Stop the operation, open the oven door and allow the cavity to cool down for 10 minutes. Restart it or contact Customer Service.
E05	Open circuit for steam generator sensor	Contact Customer Service for repair.
E06	Short circuit for steam generator sensor	Contact Customer Service for repair.
No display on the screen	1. Check whether the power is plugged. 2. Display panel is in poor contact	1. Plug the power and turn on the power. 2. Contact Customer Service for repair.
Oven lamp does not light	1. Oven lamp is damaged 2. Poor contact	1. Replace or contact the Customer Service for repair. 2. Contact Customer Service for repair.
Fan does not work	1. Poor contact 2. Fan is damaged	1. Replace or contact the Customer Service for repair. 2. Contact Customer Service for repair.
No response from the button	1. Circuit board fails or damaged 2. LED display flashing (buttons not responding)	1. Replace Circuit board. 2. Be sure the water tank have water and tank is put into Oven.
No steam	1. Water pipe is blocked 2. Steam generator is damaged 3. Water intake system is damaged	Contact Customer Service for repair.
Steam Oven is not working	1. Door is not closed tightly 2. Poor contact of Door Control Switch	1. Open and close the oven door. 2. Contact Customer Service for repair.
Steam leakage from oven door	1. Door is not closed in place 2. Door sealant is off or damaged 3. Too much steam is accumulated in the oven.	1. Push door by hand. 2. Replace sealant or contact Customer Service. 3. It is normal.

Technical Specifications

Model	SGN-B4021
Voltage / Frequency	220-240V / 50-60Hz
Rated Power	2,100-2,400W
Net Weight	Approx.21.5kg
Dimensions	(H) 440mm (W) 526mm (D)501mm
Capacity	40L

- Specifications are subject to change without prior notice.
- If there is any inconsistency or ambiguity between Chinese and English version, the Chinese version shall prevail.
- Refer to www.germanpool.com for the most updated version of the User Manual.

目錄

安全注意事項 18

產品結構 20

操作說明 22

清潔及維護 28

故障檢修 29

技術規格 30

保用條款 31

安全注意事項

1. 請勿把產品外殼放在水中沖洗，因為外殼中有電氣元件。
2. 不要讓水或其他液體進入產品，以避免觸電。
3. 本產品可供8歲及以上兒童及身體、感官或精神能力下降、缺乏經驗和知識的人使用，如他們已接 受監督或指示，並了解所涉及的危害。兒童不可玩耍、清潔和維護本產品。
4. 連接到電源之前，請檢查產品電壓是否與電源電壓相符。
5. 插頭、電源線或產品如有破損，請勿使用本產品。
6. 如果電源線損壞，必須由製造商或合格的維修技師更換，以避免危險。
7. 請確保兒童不得玩耍本產品。
8. 請勿用濕手使用插頭或操作產品。
9. 請勿將本產品放在桌布、窗簾和其他易燃材料附近。
10. 放置時產品的背面和兩旁需保留至少10厘米的空間，並且不可在產品上面放置物品。
11. 必須觀察使用中的產品。
12. 操作期間或之後打開門時，蒸氣焗爐將釋放高溫蒸氣或高溫氣流，打開門時應保持安全距離，以免燙傷。
13. 不要將任何異物塞入蒸氣焗爐門的門鎖開關中。
14. 必須使用推薦的溫度探頭。
15. 蒸氣焗爐在使用過程中會升溫。請注意蒸氣焗爐裡的加熱裝置。
16. 在使用過程中，電器會變熱。應該注意避免接觸蒸氣焗爐內的加熱元件。
17. 本產品及其部件在使用過程中會變熱。應採取措施避免接觸加熱元件。除非受到監督，8歲以下兒童不應使用本產品。
18. 請勿使用磨蝕性清潔劑或鋒利的金屬刮刀清潔蒸氣焗爐門，因為它們會劃傷表面，可能會導致玻璃破碎。
19. 不得使用蒸氣清潔機。
20. 警告：更換燈泡前請確保已關掉爐內燈泡，以避免觸電的可能。
21. 不得將設備安裝在裝飾門後面，以避免過熱。

使用前注意事項

警告

1. 使用前請仔細閱讀說明書。本產品專為家庭烹飪而設計，不適合其他公共和商業用途。
2. 使用時請勿觸摸蒸氣焗爐，因為它的表面溫度可能很高。如果需要觸摸或移動蒸氣焗爐，請先關閉 產品電源，然後再使用隔熱手套。
3. 清潔蒸氣焗爐前必須已拔下電源插頭，且蒸氣焗爐已冷卻。
4. 蒸氣焗爐應放在乾燥平坦的地方，周圍有足夠的空間，使用時應遠離周圍物體至少10厘米的距離。
5. 使用產品時電路過載可能導致蒸氣焗爐工作異常，因此應使用單路電源。
6. 不要將蒸氣焗爐放在任何易燃物體附近。它應遠離窗簾、門簾、壁紙和類似物品，以防止火災。操 作時，請勿在蒸氣焗爐上放置任何物體。
7. 請用軟濕布清潔蒸氣焗爐門的玻璃，不可使用鋒利的清潔工具，以免損壞爐門玻璃。
8. 本設備不可連接到外部計時器或獨立的遙控系統。
9. 請勿與其他大功率電器設備共用插座，以免因電路過載而引起火災。
10. 使用前請檢查所有煮食器具是否適合本產品。建議使用耐高溫玻璃或陶瓷容器盛裝食物。液體食物不得盛超過容器的三分之二容量。
11. 如果長時間不使用蒸氣焗爐，需要從插座上拔下電源插頭，以免因電源線老化而導致漏電或火災。
12. 更換燈泡或清潔內部時應拔掉電源插頭，以免觸電。
13. 水箱裝水不得過滿。請勿超過最高水位線。
14. 使用後不要將食物放在玻璃門上，以免造成使用者燙傷。
15. 每次使用蒸氣焗爐後，必須取出並清空水箱，從設備中排出殘留的水。
16. 1不要將食物放在密封容器中加熱，例如密封瓶、盒裝牛奶等，因為它可能會爆開。必須撕開包裝並將食物放入其他容器中加熱。
17. 請將蒸氣焗爐放在850毫米以上的檯上。

產品結構

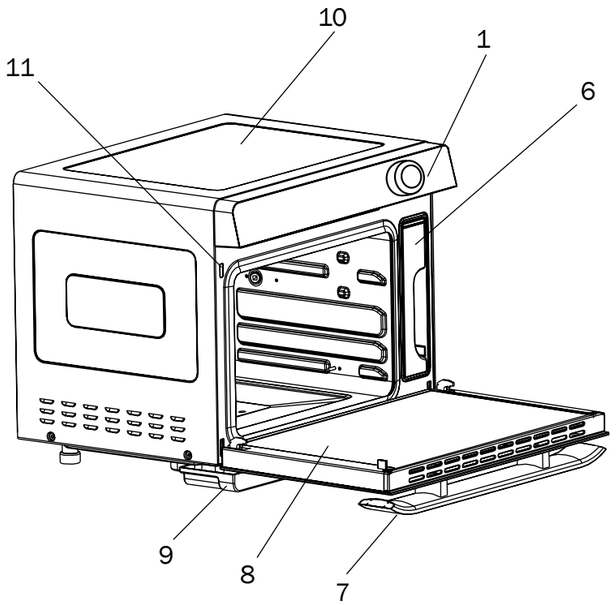

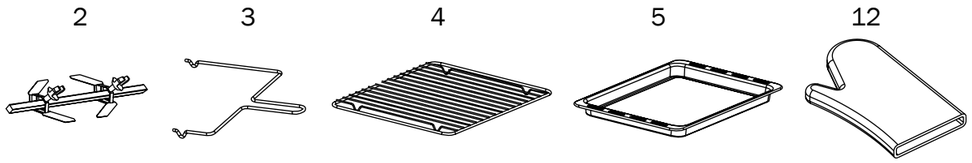

1. 控制面板
2. 旋轉燒烤叉
3. 燒烤叉柄
4. 網架
5. 集油盤
6. 水箱
7. 爐門把手
8. 蒸氣焗爐門
9. 接水盤
10. 蒸氣焗爐
11. 爐門安全裝置
12. 隔熱手套

配件	數量
網架	1
集油盤	1
旋轉燒烤叉	1
燒烤叉柄	1
隔熱手套	1
説明書	1

產品結構

共有四層位置可放入網架，請將凸位處向下置入爐內。請根據不同食譜自行調節最適當層位。

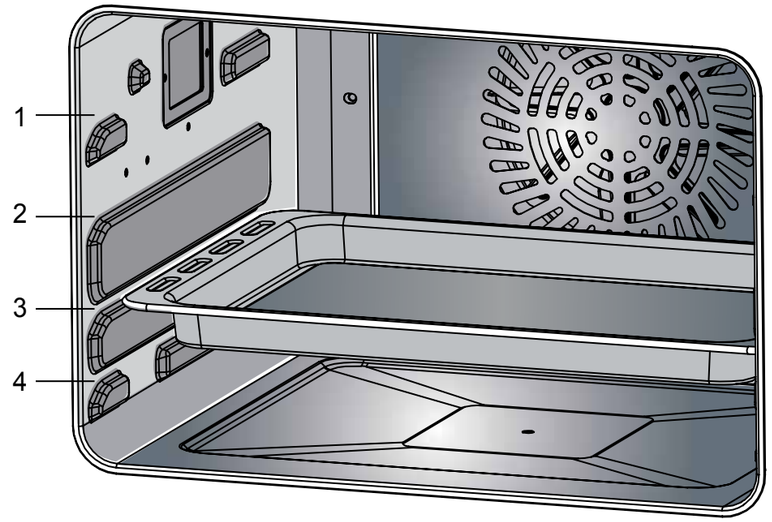

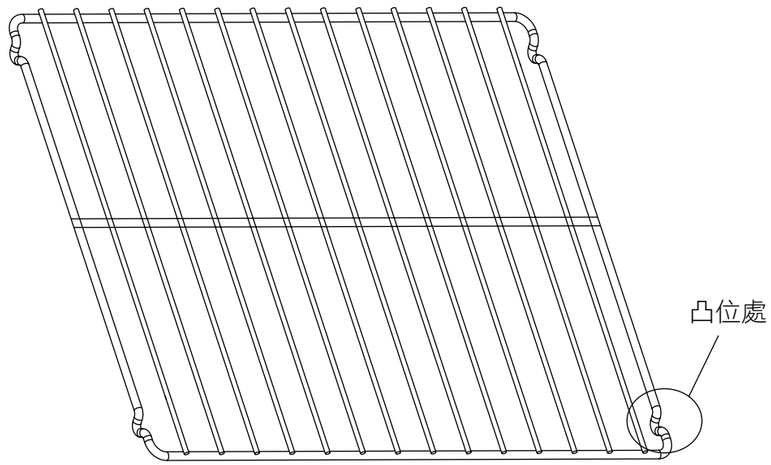

控制面板

功能鍵	對應功能
電源鍵	1. 當產品接通電源後，蜂鳴器發出提示聲一聲，指示燈亮起。用戶可按「電源鍵」進入功能選擇模式。 2. 如果用戶連續5分鐘內沒有任何操作，則當前設置將被取消並返回待機狀態。
童鎖/設定鍵	**設定** 1. 處於工作狀態時，「童鎖/設定鍵」常亮，當用戶按下此鍵，LED顯示屏及旋鈕閃爍，此時，可旋轉旋鈕調節溫度和時間，然後按下旋鈕確認。如用戶未有按下旋鈕確認，LED顯示屏及旋鈕會於閃爍5秒後自動確認該設定。用戶可在烹飪過程中多次進行以上程序，調整時間和溫度。 2. 處於工作狀態時，「童鎖/設定鍵」常亮，用戶可根據該食物份量，按「童鎖/設定鍵」來調節時間，每次進行模式只可調節時間一次，時間確認後「童鎖/設定鍵」熄滅，用戶不可再次調節時間。 **童鎖** 3. 在任何模式下，當「童鎖/設定鍵」亮著，用戶可按此鍵3秒進入童鎖模式，指示燈將會常亮。再按「童鎖/設定鍵」3秒可解除童鎖模式。
旋鈕	4. 按旋鈕開始或暫停烹調 5. 旋轉旋鈕進行選擇；順時針循環功能選擇為：蒸/烤焗/蒸及烤焗/氣炸/食譜/清除水垢/解凍/發酵 6. 在工作狀態下，旋轉旋鈕調節溫度及時間 7. 當旋鈕閃爍時，表示用戶需要按或旋轉旋鈕，調整或確認當前工作程序或設置。 8. 當產品正常運作時，旋鈕常亮。

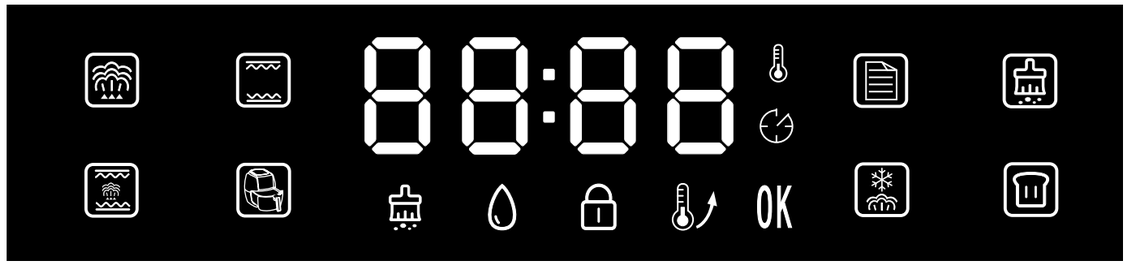

功能鍵	對應功能
蒸	1. 主要功能為蒸。預設時間及溫度為30分鐘及100°C。 2. 當用戶選擇此功能時，蒸指示燈和旋鈕閃爍，用戶可以按旋鈕確認並進入設定模式。 3. 旋轉旋鈕設置時間，可調時間為1分鐘到2小時，完成時間設置後，按旋鈕進行確認並進入溫度設置，可調節溫度為50-110°C，設置完成後，按旋鈕開始工作及倒計時。
烤焗	1. 使用烤焗功能時，上下發熱線一起工作，並在用戶將食物放入爐內之前進行預熱。預設時間及溫度為30分鐘及180°C。 2. 旋轉旋鈕設置時間，可調時間為1分鐘到2小時，完成時間設置後，按旋鈕進行確認並進入溫度設置，可調節溫度為100-230°C，設置完成後，按旋鈕開始工作及倒計時。 3. 當產品開始工作時，預熱指示燈常亮，表示產品正在預熱；預熱完成後，預熱指示燈熄滅，蜂鳴器會發出提示聲10聲，提醒用戶將食物放入烤箱，然後自動開始烤焗。
蒸及烤焗	1. 主要功能為烤焗，並在烤焗期間注入少量蒸氣，令烹調更快而食物不會太乾。預設時間及溫度為30分鐘及180°C。 2. 旋轉旋鈕設置時間，可調時間為1分鐘到2小時，完成時間設置後，按旋鈕進行確認並進入溫度設置，可調節溫度為120-230°C，設置完成後，按旋鈕開始工作及倒計時。
氣炸	3. 主要功能為空氣炸，發熱線與熱風對流系統一起工作。預設時間及溫度為30分鐘及180°C。 4. 旋轉旋鈕設置時間，可調時間為1分鐘到2小時，完成時間設置後，按旋鈕進行確認並進入溫度設置，可調節溫度為100-230°C，設置完成後，按旋鈕開始工作及倒計時。 5. 當產品開始工作時，預熱指示燈常亮，表示產品正在預熱；預熱完成後，預熱指示燈熄滅，蜂鳴器會發出提示聲10聲，提醒用戶將食物放入烤箱，然後自動開始烤焗。

功能鍵	對應功能
食譜	1. 內置31個預設食譜以供選擇。 2. 當用戶選擇此功能時，食譜指示燈 和旋鈕 閃爍，LED顯示屏顯示「F-00」，按旋鈕 進入食譜選單，LED顯示屏顯示「F-01」，此時旋轉旋鈕 可選擇食譜：「F-01」、「F-02」...「F-31」循環，完成設置後，按旋鈕 開始工作。 3. 開始工作後，「童鎖/設定鍵」 亮起，用戶可因應食物份量調節工作時間，每次只可設置一個食譜，完成設置後，「童鎖/設定鍵」 熄滅，用戶將無法再次調節工作時間。
清除水垢	主要功能為烹調後清除水垢。 當用戶選擇此功能時，清除水垢指示燈 和旋鈕 閃爍，用戶可以按旋鈕 確認並進入設定模式，可選「C-1」及「C-2」。 「C-1」：清潔蒸氣產生器的水垢50分鐘； 「C-2」：以25分鐘及100°C消毒及清潔爐腔。 「C-1」模式使用説明 1. 當蒸氣產生器累計工作時間達100小時後，系統會提醒用戶進行除垢，清除水垢指示燈 閃爍（此時，用戶可即時使用清除水垢模式）。 2. 準備除垢劑（水和清潔劑）按照1：8的混合比例均勻混合後注入水箱，除垢混合物的劑量不得低於水箱的最低刻度。 3. 當倒時計剩餘20分鐘時，將提醒用戶取出水箱排放除垢劑並更換為清水，插入水箱後繼續工作。當倒時計剩餘10分鐘時，將提醒用戶再次取出水箱更換乾淨的水，插入水箱後，繼續工作。完成工作後，清除水垢提示指示燈熄滅。 清除水垢時，清除水垢提示指示燈 常亮。
解凍	1. 當用戶選擇此功能時，解凍指示燈 和旋鈕 閃爍，用戶可以按旋鈕 確認並進入設定模式。 2. 旋轉旋鈕 設置時間，可調時間為5分鐘到2小時，完成時間設置後，按旋鈕 進行確認並進入溫度設置，可調溫度為50-60°C， 3. 設置完成後，按旋鈕 開始工作及倒計時。 4. 默認時間和溫度為20分鐘及55°C。
發酵	1. 當用戶選擇此功能時，發酵指示燈 和旋鈕 閃爍，用戶可以按 旋鈕 確認並進入設定模式。 2. 旋轉旋鈕 設置時間，可調時間為5分鐘到 2 小時，完成時間設置後，按旋鈕 進行確認並進入溫度設置，可調溫度為30-50°C， 3. 設置完成後，按旋鈕 開始工作及倒計時。 4. 默認時間和溫度為40分鐘及40°C。

功能鍵	對應功能
水箱提示	任何工作模式啟動時，如果水箱已空或水量低於最低刻度，產品將停止工作，水箱提示指示燈 閃爍，蜂鳴器發出提示聲10聲，所有按鍵無效。為水箱注水並放回機體後才可繼續工作。
預熱	當預熱指示燈常亮，表示產品正在預熱，完成工作後指示燈將會熄滅。
烹調完成提示 OK	當烹調完成提示指示燈 OK 常亮，及LED顯示屏顯示「END」表示當前工作完成。
童鎖	當童鎖指示燈常亮，表示已進入童鎖狀態，所有按鍵鎖定；按「童鎖/設定鍵」 3秒可解除童鎖模式，指示燈將會熄滅。
清除水垢提示	當清除水垢提示指示燈 常亮，表示產品正在除垢，完成工作後指示燈將會熄滅。

其他功能

烹調過程	**1. 暫停** 在工作期間按下旋鈕 ⏯ ，LED顯示屏及旋鈕 ⏯ 閃爍，倒時計將會暫停，並停留在工作狀態界面。當用戶再次按下旋鈕 ⏯ ，即可繼續進行工作，倒時計回復倒數。 在工作期間打開爐門，LED顯示屏及旋鈕 ⏯ 閃爍，倒時計將會暫停，並停留在工作狀態界面。當用戶關上爐門，即可繼續工作，倒時計回復倒數。 **2. 調節時間及溫度** 在工作期間，用戶可經以下步驟調節烹調時間及溫度： 當用戶按下「童鎖/設定鍵」 🔒 ，LED顯示屏及旋鈕 ⏯ 閃爍，此時，可旋轉旋鈕 ⏯ 調節時間，然後按下旋鈕 ⏯ 確認。 完成時間設置後，進入溫度設置模式，此時，可旋轉旋鈕 ⏯ 調節溫度，然後按下旋鈕 ⏯ 確認。如無需調節溫度，可直接按下旋鈕 ⏯ 繼續工作。 當用戶使用食譜功能，開始工作後，「童鎖/設定鍵」 🔒 亮起，用戶可因應食物份量調節工作時間，完成設置後，「童鎖/設定鍵」 🔒 熄滅，用戶將無法再次調節工作時間。
爐燈	1. 當產品開始工作後，爐燈會亮著3分鐘，然後自動熄滅。 2. 當用戶打開爐門，爐燈會亮著3分鐘，然後自動熄滅；當用戶關上爐門後，爐燈會亮著3分鐘，然後自動熄滅。 3. 在工作或待機狀態下，當用戶旋轉旋鈕，爐燈會亮著3分鐘，然後自動熄滅。
爐門開關	在工作期間，如用戶打開爐門，產品將暫停工作，直至爐門關上，產品將自動繼續工作。
工作完成	完成烹調後，蜂鳴器會發出提示聲10聲及LED顯示屏顯示「END」，烹調完成提示指示燈 OK 常亮，表示烹調或食譜已完成工作。

內置食譜

內置食譜只供參考，如用戶放入較多食物，或以多層烹調，請以「設定/童鎖鍵」調節烹調時間。

程式	F-01	F-02	F-03	F-04	F-05	F-06	F-07	F-08	F-09
菜式	蒸菜	蒸飯	蒸魚	蒸蝦	蒸蟹	蒸蛋	蒸雞	蒸木瓜	烤雞
加熱時間(分鐘)	16	50	20	15	30	18	30	35	45
加熱溫度(℃)	100	100	100	100	100	100	100	100	230
食物份量(克)	600	200	600	500	800	300	800	400	1000
程式	F-10	F-11	F-12	F-13	F-14	F-15	F-16	F-17	F-18
菜式	烤牛扒	烤羊肉	烤肋骨	烤三文魚	烤雞腳	烤雞翼	烤秋刀魚	烤薯片	烤蝦
加熱時間(分鐘)	13	35	20	22	26	23	20	18	15
加熱溫度(℃)	230	200	210	210	210	210	220	220	180
食物份量(克)	600	600	500	400	750	500	600	500	400
程式	F-19	F-20	F-21	F-22	F-23	F-24	F-25	F-26	F-27
菜式	烤香腸	烤煙肉	烤薄餅	迷你薄餅	法式麵包	雪芳蛋糕	乳酪芝士蛋糕	泡芙	曲奇餅
加熱時間(分鐘)	13	11	22	18	16	50	60	32	14
加熱溫度(℃)	200	200	180	180	180	150	150	180	180
程式	F-28	F-29	F-30	F-31					
菜式	蛋撻	烤杏仁	烤胡桃	乳酪					
加熱時間(分鐘)	22	10	12	480					
加熱溫度(℃)	180	140	160	45					

清潔與維護

1. 清潔內部前，請關掉蒸氣焗爐，然後從插座上拔下電源線。
2. 請勿使用金屬工具或尖銳物體清潔蒸氣焗爐表面，因為表面上有不粘塗層。
3. 請經常保持內部清潔。當爐腔內壁有食物或油脂飛濺和污漬時，可以用濕布 及洗潔精擦拭和清潔。不要用硬物清潔。
4. 建議使用純水或蒸餾水。如果長時間使用自來水，爐腔會出現水垢。
5. 應定期檢查水箱。如需取出時水箱應水平取出。清潔水箱必須使用軟布輕輕擦拭。 擦拭或清潔內壁後，應將水箱放回原處。
6. 烹飪完成後，應取下接水盤中的殘留水。
7. 應經常清潔爐門的密封面，並用柔軟的乾布擦拭。
8. 如果長時間不使用，則必須拔下插頭，並清潔內部，然後將蒸氣焗爐放置在沒有腐蝕性氣體的乾燥環境中。
9. 如果發生任何故障，必須由經過認證的技術人員對產品進行維修。不要自己拆卸。
10. 請勿使用粗糙的清潔劑或鋒利的金屬刮刀清潔爐門，因為這可能會導致玻璃損壞。
11. 清潔內部或更換燈泡時，應拔掉電源線。
12. 請勿使用蒸氣清潔機。

故障檢修

錯誤	可能原因	排除辦法
E01	頂部傳感器開路	停止操作，打開爐門讓內部空氣冷卻10分鐘，然後重啟或聯繫客戶服務及維修
E02	頂部傳感器短路	停止操作，打開爐門讓內部空氣冷卻10分鐘，然後重啟或聯繫客戶服務及維修
E03	底部傳感器開路	停止操作，打開爐門讓內部空氣冷卻10分鐘，然後重啟或聯繫客戶服務及維修
E04	底部傳感器短路	停止操作，打開爐門讓內部空氣冷卻10分鐘，然後重啟或聯繫客戶服務及維修
E05	蒸發加熱器傳感器開路	聯繫客戶服務及維修中心
E06	蒸發加熱器傳感器短路	聯繫客戶服務及維修中心
顯示屏沒有顯示	1. 檢查電源插頭是否插好 2. 顯示屏接觸不良	1. 重啟 2. 聯繫客戶服務及維修中心
爐燈不亮	1. 爐燈損壞 2. 爐燈接觸不良	1. 更換燈泡或聯繫客戶服務及維修中心 2. 聯繫客戶服務及維修中心
散熱風扇不工作	1. 風扇接觸不良 2. 風扇損壞	1. 更換風扇或聯繫客戶服務及維修中心 2. 聯繫客戶服務及維修中心
按鍵失靈	1. PCB發生故障或損壞 2. 只有時間LED顯示屏閃爍，其他按鍵失靈	1. 更換PCB 2. 確認水箱水量及已置入爐內
不出蒸氣	1. 水管堵塞 2. 蒸發加熱器損壞 3. 進水系統損壞	聯繫客戶服務及維修中心
蒸氣焗爐不工作	1. 門沒有關實 2. 爐門安全裝置接觸不良	1. 重新把門關實 2. 聯繫客戶服務及維修中心
爐門漏氣	1. 門未能關實 2. 門的密封圈破壞 3. 當爐內蒸氣過量，會自動排放，屬正常現象	1. 重新把門關實 2. 聯繫客戶服務及維修中心

技術規格

型號	SGN-B4021
電壓/頻率	220-240V / 50-60Hz
功率	2100-2400W
淨重	約21.5kg
尺寸	(H) 440mm (W) 526mm (D)501mm
爐腔容積	40L

- 產品規格及設計如有變更，恕不另行通知。
- 中英文版本如有出入，一概以中文版為準。
- 本產品使用説明書以www.germanpool.com網上版為最新版本。

保用條款

此保用提供德國寶產品之機件在正常使用下壹年保用(自購買日起計算)。

* 貴戶須在購機十天內，以下列其中一種方式向本公司登記資料，保用手續方正式生效：

1) 填妥本公司網頁內之保用登記表格
www.germanpool.com/warranty

2) 填妥保用登記卡，郵寄至本公司。

Warranty Terms & Conditions

Under normal operations, the product will gurantee a 1-year full warranty provided by German Pool (effective from the date of purchase).

* This warranty is not valid until customer registration information is received by our Service Centre within 10 days of purchase via one of the following means:

1) Visit our website and register online:
www.germanpool.com/warranty

2) Complete all the fields on the attached Warranty Card and mail it back to our Customer Service Centre.

另請填妥以下表格並與正本發票一併保存，以便維修時核對資料。用戶提供之所有資料必須正確無誤，否則免費保用將會無效。
Please fill out the form below. This information and the original purchase invoice will be required for any repairs. Warranty will be invalidated if information provided is found to be inaccurate.

型號 Model No. : SGN-B4021

機身號碼 Serial No. : _____ 發票號碼 Invoice No. : _____

購買商號 Purchased From : _____ 購買日期 Purchase Date : _____

1. 未能出示購買發票正本者，將不獲免費維修服務。
2. 用戶應依照説明書的指示操作。本保用並不包括：
   - 上門安裝、檢驗、維修或更換零件之人工以及一切運輸費用；
   - 因天然與人為意外造成的損壞 (包括運輸及其他)；
   - 電源接合不當、不依説明書而錯誤或疏忽使用本機所引致之損壞。
3. 於下列情況下，用戶之保用資格將被取消：
   - 購買發票有任何非認可之刪改；
   - 產品被用作商業或工業用途；
   - 產品經非認可之技術人員改裝或加裝任何配件；
   - 機身編號被擅自塗改、破壞或刪除。
4. 總代理有權選擇維修或更換配件或其損壞部份。
5. 產品一經被轉讓，其保用即被視作無效。

1. Customer who fails to present original purchase invoice will not be eligible for free warranty service.
2. Customer should always follow the operating instructions. This warranty does not apply to:
   - labour costs for on-site installation, check-up, repair, replacement of parts and other transportation costs;
   - damages caused by accidents of any kind (including material transfer and others);
   - operating failures resulting from applying incorrect voltage, improper usage, and unauthorized installations or repairs.
3. This warranty is invalid if:
   - the purchase invoice is modified by an unauthorized party;
   - the product is used for any commercial or industrial purposes;
   - the product is repaired or modified by unauthorized personnel, or unauthorized parts are installed;
   - the serial number is modified, damaged or removed from the product.
4. German Pool will, at its discretion, repair or replace any defective part.
5. This warranty will be void if there is any transfer of ownership from the original purchaser.

客戶服務及維修中心

中國香港

九龍灣啟興道1-3號
九龍貨倉10樓
電話：+852 2333 6249
傳真：+852 2356 9798
電郵：repairs@germanpool.com

中國澳門

澳門俾利喇街145號
寶豐工業大廈3樓
電話：+853 2875 2699
傳真：+853 2875 2661

Customer Service & Repair Centre

Hong Kong, China

10/F, Kowloon Godown
1-3 Kai Hing Road, Kowloon Bay,
Kowloon, Hong Kong
Tel : +852 2333 6249
Fax : +852 2356 9798
Email : repairs@germanpool.com

Macau, China

3/F, Edificio Industrial Pou Fung,
145 Rua de Francisco Xavier Pereira,
Macau
Tel : +853 2875 2699
Fax : +853 2875 2661

此保用只適用於香港及澳門 | This warranty is valid only in Hong Kong and Macau

GERMAN
POOL

German Pool (Hong Kong) Limited

Hong Kong, China
Room 113. Newport Centre Phase II. 116 Ma Tau Kok Road. Tokwawan. Kowloon. Hong Kong.
Tel: +852 2773 2888
Fax:+852 2765 8215

Mainland China
8th, Xinxiang Road, Wusha Industrial Park, Daliang, Shunde, Foshan, Guangdong
Tel:+86 757 2980 8308
Fax:+86 757 2980 8318

Macau, China
3/F, Edificio Industrial Pou Fung,
145 Rua de Francisco Xavier Pereira, Macau
Tel:+853 2875 2699
Fax:+853 2875 2661

香港《S MARK》安全認證 | 中國櫥櫃/家電行業十大影響力品牌 | CEO非凡品牌大賞 | 香港優質商號 | 香港工商業獎 | 2007 最具潛質創建品牌企業獎 | 香港中小企業最佳拍檔大獎 | 香港消費者推崇品牌 | 香港《Q嘜》優質服務證書 | 香港名牌十年成就獎 HONG KONG TOP BRAND TEN YEAR ACHIEVEMENT AWARD

© All rights reserved. Copying, reproducing or using the contents of this manual is not allowed without prior authorization from German Pool, violators will be prosecuted.